OUTDOOR
FIREPLACES

outdoor lifestyles
by hearth & home technologies®

Lanai 48" shown with crushed glass firebed

OUTDOOR FIREPLACES

Our innovative products make it easy to extend your living into the outdoors. Think of it as adding a new room to your home—an outdoor living room. See how Outdoor Lifestyles by Hearth & Home Technologies can transform your outdoor space.

Lanai 48" shown with clean face trim and Driftwood Logs

LANAI
OUTDOOR GAS FIREPLACE

Light up your landscape with our best and brightest, the Lanai linear outdoor gas fireplace. The night comes alive with glowing flames and a colorful crushed glass firebed reflected in stainless steel as you create a contemporary vibe to your outdoor space.

Lanai Double-Sided 48" shown with stone kit

- Modern linear design in 48", 60" and stunning 48" double-sided models
- LED lighting in eight colors (choose one or cycle) and three intensity levels
- Stainless-steel interior to reflect and magnify the flames
- Durable with rust-resistant, stainless-steel construction
- IntelliFire® ignition system with wall control constantly monitors ignition and ensures safe functioning

Weatherproof wall control to run your fireplace and change LED colors

- No chimney or venting needed, blends anywhere into your space
- Glass wind guard to keep flame pattern steady and strong

Optional features

- Add a layer of safety with an optional screen to protect and prevent debris from entering the fireplace
- Add optional ceramic stone or driftwood logs for a touch of customization
- Ensure even longer life with a drain pan that moves moisture away from the fireplace

Safety Screen

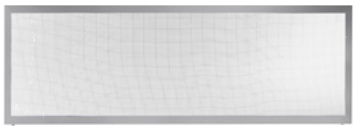

Wall Control

LED Lighting

White | Red | Violet | Purple | Aqua | Royal Blue | Spring Green | Emerald

Courtyard 36" shown with Premium Traditional Brick interior and High Definition Logs

COURTYARD
OUTDOOR GAS FIREPLACE

The Courtyard outdoor gas fireplace is the perfect blend of artistry and function: traditional styling with ultra-realistic logs that ignite at the flip of a switch. Mesmerizing flames provide instant ambiance and relaxation. Cozy up with the Courtyard.

- Choose from multiple interior options including stainless steel to magnify the flames, traditional brick for a classic look or premium stacked or herringbone brick for a unique look in neutral tones
- Rust-resistant stainless steel construction
- IntelliFire ignition system with wall control constantly monitors ignition and ensures safe functioning
- Available in 36" or 42" widths

Optional feature

- Framed Mesh Barrier

Courtyard 36" shown with Premium Traditional Brick interior and High Definition Logs

Wall Control

Framed Mesh Barrier

Log Sets

Standard Logs

High Definition Logs

Interior Styles

Stainless Steel

Premium Brown Traditional

Premium Brown Herringbone

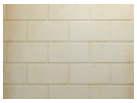

Standard Traditional

Premium Gray Traditional

Premium Gray Herringbone

Premium Black Traditional

Premium Black Herringbone

Vesper 36" shown with herringbone brick interior, optional stainless steel operable doors and Mountain Oak logs

VESPER
OUTDOOR GAS FIREPLACE

The Vesper vent-free outdoor gas fireplace expands your living area as you warm up your outdoor space in style. With stainless-steel construction, it's durable to handle the elements.

You get a big view of the flames with an opening 27 inches tall and 36 or 42 inches wide. Pick from three unique log sets accented by a traditional or herringbone brick interior to create your own look.

- 36" or 42" wide viewing area
- Brick-to-brick opening for true masonry appearance
- Vent-free design to place it almost anywhere
- Interior panels in traditional and herringbone brick
- Choice of three log designs to fit your style

Optional feature

- Stainless-steel operable mesh doors keep out debris

Vesper shown with standard stainless steel mesh curtain screen and herringbone brick interior

Log Sets

Mezmer Logs

Mezmer Split Logs

Mountain Oak Logs

Operable Mesh Doors

Stainless Steel

VillaWood 42" shown with standard stainless steel mesh, traditional brick interior and outdoor Fireside Realwood gas logs

VILLAWOOD
OUTDOOR WOOD FIREPLACE

The VillaWood is a wood-burning fireplace at home in a variety of outdoor spaces. Upgrade your outdoor kitchen, or enhance your living area with style and warmth. Add the Villa Wood outdoor fireplace to your deck or patio and enjoy the experience of a wood fire.

- Choose from traditional or herringbone brick interior for an authentic masonry look
- Steel grate and stainless steel mesh curtain screens built to look great for years
- 36" or 42" wide fireplace adds enjoyment to your space

Optional features

- Bi-fold glass doors with stainless steel finish
- Outdoor Fireside Realwood gas log set for the added convenience of gas

Villawood shown with stainless steel bi-fold doors, traditional brick interior and outdoor Fireside Realwood gas logs

Interior Styles

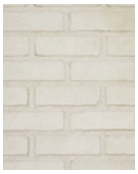

Traditional

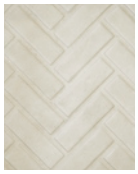

Herringbone

Bi-Fold Glass Doors

Cottagewood 42" shown with traditional brick interior and outdoor Grand Oak gas logs

COTTAGEWOOD
OUTDOOR WOOD FIREPLACE

Gather with family and friends around the crackle and aroma of a blazing fire as you take the chill off evenings and extend the outdoor season. The Cottagewood outdoor wood-burning fireplace is weather-proof for long life, while brick-like interior panels help create a nostalgic vibe.

The night comes alive as you stoke a fire, kick back and toast marshmallows. Cozy up around a classic wood burner that's low on upkeep but high on good looks—setting the mood where the best moments begin.

- 36" or 42" wide openings
- Tuckaway stainless-steel screens for open view of flames or to keep sparks in
- Easy damper control for airflow/smoke control on enclosed patios
- Safe on a wood or composite deck with a 20" protective hearth apron
- Mineral Gray traditional or herringbone brick interior panels
- Black painted grate keeps logs in place and burns more efficiently
- Place freestanding or next to an exterior wall

Cottagewood shown with traditional brick interior and outdoor Grand Oak gas logs

Interior Styles

Traditional

Herringbone

Castlewood shown with standard stainless steel mesh, traditional molded brick interior and outdoor Fireside Grand Oak gas log set

CASTLEWOOD
OUTDOOR WOOD FIREPLACE

The Castlewood turns any outdoor area into a welcoming and relaxing living space. A large, high opening provides a dramatic view from across the yard, and a textured brick interior offers masonry-style looks at a fraction of the cost. Enjoy the experience of a large wood fire with the Castlewood.

- Expansive 38" high firebox opening
- Choose from traditional or herringbone brick interior for an authentic masonry look
- Black steel grate and stainless steel mesh curtain screens built to look great for years
- 42" wide fireplace adds enjoyment to your space

Optional features

- Outdoor Fireside Grand Oak log set for the added convenience of gas
- Premium bi-fold glass doors with a bronze finish

Castlewood shown above with stainless steel mesh curtain screens, traditional molded brick interior and outdoor Fireside Grand Oak gas log set.

Interior Styles

Traditional

Herringbone

Forum 55" outdoor linear built-in (frameless look without front) with orange flame

FORUM
OUTDOOR ELECTRIC FIREPLACE

The SimpliFire Forum outdoor electric fireplace is the easiest way to turn your patio or deck into a go-to oasis. Designed for outdoors and with the flexibility to place it anywhere, the Forum expands your livable area with freedom from propane tanks, gas lines or wood.

Feature

- Big presence in 43" and 55" linear sizes
- Durable to withstand the elements
- Clean look with finishing materials to the edge or framed with included overlap front
- Four flame and 13 ember-bed colors to fit your mood
- Pick the look you want, from clear crystals or driftwood logs with glowing embers
- No heat allows you to safely place a TV or artwork directly above the fireplace
- Easy remote control

Forum 43" outdoor linear recessed (with self-trimming front) shown with Driftwood logs

Included media

Clear crystals

Driftwood logs

Optional ShadowGlo™ log sets

Alpine Timber logs

Natural Birch logs

LANAI

Model	Front Width A		Height B		Depth C		Viewing Area D x E	BTU/hr Input
	Unit	Framing	Unit	Framing	Unit	Framing		
Lanai 48"	52-1/8" [1324]	52-3/4" [1340]	39-1/2" [1003]	39-3/4" [1009]	13-3/8" [340]	13-3/8" [340]	47-7/8" x 17" [1216 x 432]	55,000
Lanai 60"	64-1/8" [1629]	64-3/4" [1645]	39-1/2" [1003]	39-3/4" [1009]	13-3/8" [340]	13-3/8" [340]	60" x 17" [1524 x 432]	65,000

Front View

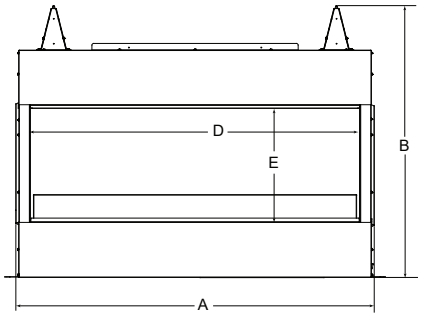

Side View

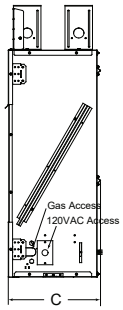

LANAI DOUBLE-SIDED

Model	Width		Height		Depth		Viewing Area	BTU/hr Input
	Unit	Framing	Unit	Framing	Unit	Framing		
Lanai See-Through 48"	52-1/8" [1324]	52-3/4" [1340]	39-1/2" [1003]	39-3/4" [1009]	13" [330]	11-5/8" [295]	47-7/8" x 17" [1216 x 432]	55,000

Front View

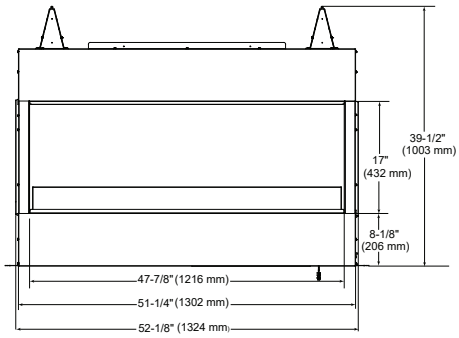

Side View

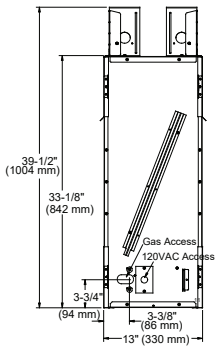

COURTYARD

Model	Front Width A		Back Width B		Height		Depth		Viewing Area	BTU/hr Input
	Unit	Framing	Unit	Framing	Unit	Framing	Unit	Framing		
Courtyard 36"	36" [914]	42-1/2" [1080]	31-1/4" [794]	42-1/2" [1080]	34" [864]	34-1/4" [870]	20" [508]	20-1/4" [514]	36" x 30" [914 x 762]	55,000
Courtyard 42"	42" [1067]	48-1/2" [1232]	37-1/4" [946]	48-1/2" [1232]	34" [864]	34-1/4" [870]	20" [508]	20-1/4" [514]	42" x 30" [1067 x 762]	55,000

Top View

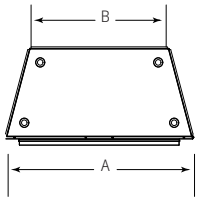

Front View

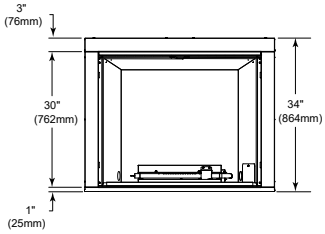

Side View

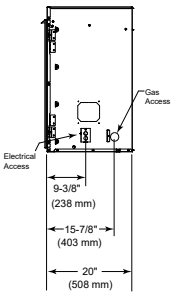

VESPER

Model	Front Width A		Back Width B		Height		Depth		Viewing Area C	BTU/hr Input
	Unit	Framing	Unit	Framing	Unit	Framing	Unit	Framing		
Vesper 36"	42" [1067]	42-1/2" [1080]	31-1/4" [794]	42-1/2" [1080]	34" [864]	34-1/4" [870]	20" [508]	19-3/4" [502]	36" x 27" [914 x 686]	38,000
Vesper 42"	48" [1219]	48-1/2" [1232]	37-1/4" [946]	48-1/2" [1232]	34" [864]	34-1/4" [870]	20" [508]	19-3/4" [502]	42" x 27" [1067 x 686]	38,000

Front View

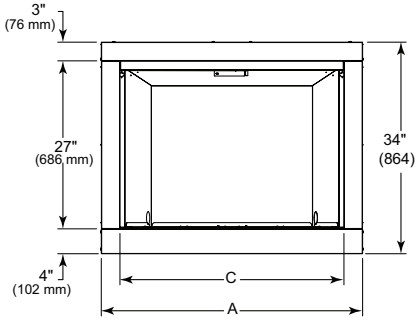

Top View

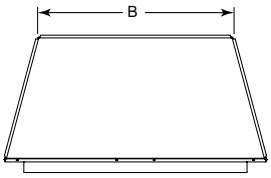

Left Side View

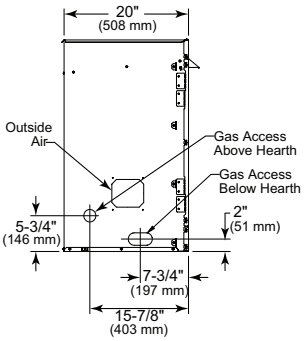

Right Side View

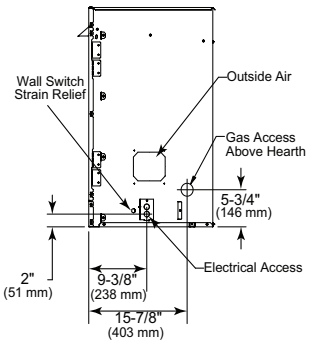

VILLAWOOD

Model	Front Width		Back Width		Height		Depth		Viewing Area
	Unit	Framing	Unit	Framing	Unit	Framing	Unit	Framing	
Villawood-36"	41" [1041]	42" [1067]	23-3/4" [603]	42" [1067]	39-1/2" [1003]	39-3/4" [1010]	21-3/8" [544]	21-1/2" [546]	36" x 20-7/8" [914 x 532]
Villawood-42"	47" [1194]	48" [1219]	29-3/4" [756]	48" [1219]	39-1/2" [1003]	39-3/4" [1010]	21-3/8" [544]	21-1/2" [546]	42" x 20-7/8" [1067 x 532]

Drawings to the right represent the 36" and 42" combined.

Model	Villawood-36"	Villawood-42"
A	23-3/4" [603]	29-3/4" [756]
B	41" [1041]	47" [1194]
C	11-7/8" [302]	14-7/8" [378]
D	36" [914]	42" [1067]

Top View

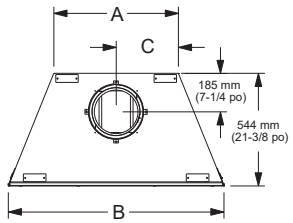

Front View

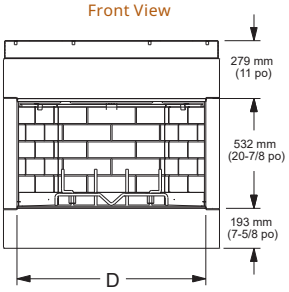

Right Side View

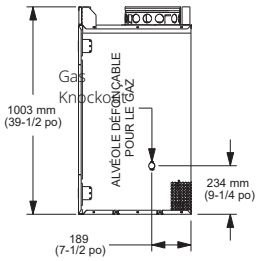

COTTAGEWOOD

Model	Front Width		Back Width		Height		Depth		Viewing Area
	Unit	Framing	Unit	Framing	Unit	Framing	Unit	Framing	
Cottagewood-36"	44-1/2" [1130]	45-1/2" [1156]	28-5/8" [727]	45-1/2" [1156]	59-1/4" [1505]	59-3/4" [1518]	27-1/2" [699]	28" [711]	36" x 28-1/2" [914 x 724]
Cottagewood-42"	50-1/2" [1283]	51-1/2" [1308]	34-1/2" [876]	51-1/2" [1308]	59-1/4" [1505]	59-3/4" [1518]	27-1/2" [699]	28-1/2" [724]	42" x 28-1/2" [1067 x 724]

Drawings to the right represent the 36" and 42" combined.

Model	Cottagewood-36"	Cottagewood-42"
A	44-1/2" [1130]	50-1/2" [1283]
B	28-5/8" [727]	34-1/2" [876]
C	36" [914]	42" [1067]

Top View

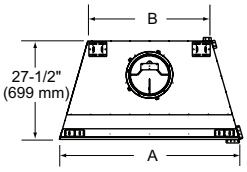

Front View

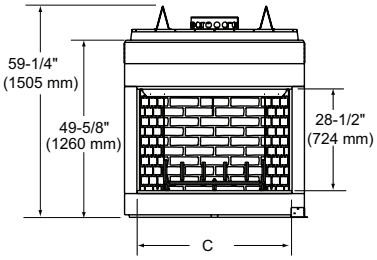

Right Side View

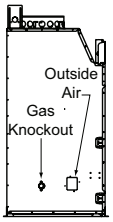

CASTLEWOOD

Model	Front Width		Back Width		Height		Depth		Viewing Area
	Unit	Framing	Unit	Framing	Unit	Framing	Unit	Framing	
Castlewood-42"	52-7/8" [1343]	53-7/8" [1368]	37-1/8" [943]	40-1/8" [1019]	74-1/8" [1883]	74-1/2" [1892]	27-1/2" [699]	28-1/2" [724]	41-7/8" x 38" [1063 x 965]

Top View

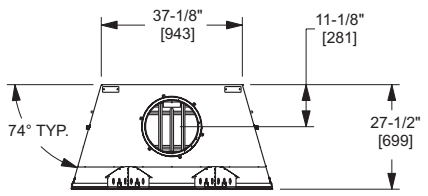

Left Side View

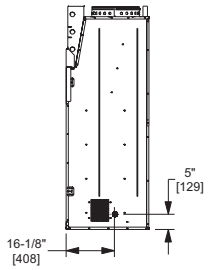

Front View

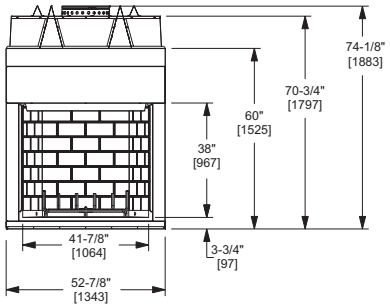

Right Side View

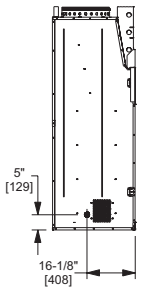

FORUM

Model	Width A	Height B	Depth C	Glass Size D x E
SF-OD43	46" [1168]	18-1/8" [460]	8-1/4" [210]	43-1/2" x 15-7/16" [1104 x 392]
SF-OD55	58" [1473]	18-1/8" [460]	8-1/4" [210]	55-1/2" x 15-7/16" [1410 x 392]

Front View

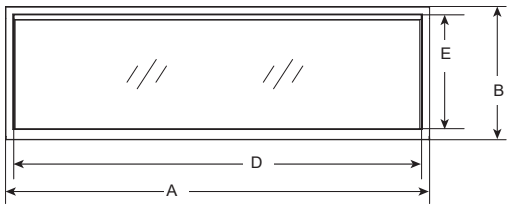

Side View

Top View

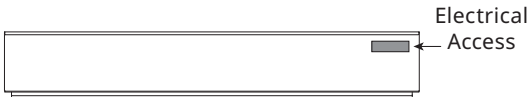

Learn more
about our outdoor fireplaces

fireplaces.com

For complete information and valuable assistance on these products, contact us at:

Our sustainability story

Our history of leadership in the hearth industry compels us to now lead the way in developing manufacturing practices that ensure our planet remains as durable, beautiful and long-lasting as our products. Find out how we are leading the industry in sustainable practices by scanning the code above.

Limited Warranty**

Hearth & Home Technologies guarantees protection for all products in this brochure for a period of one year from the date of purchase.

The information provided in this literature is for planning purposes only and subject to change. The flame and ember appearance may vary based on the type of fuel burned and venting configuration used. Actual product appearance, including flame, may differ from product images.
*Please consult the MSRP book for a complete list of optional accessories.
**For full warranty details, see appropriate installation manual.
©2024 Hearth & Home Technologies.

c UL US LISTED

outdoor lifestyles
by hearth & home technologies®

HHT-1032U-0125